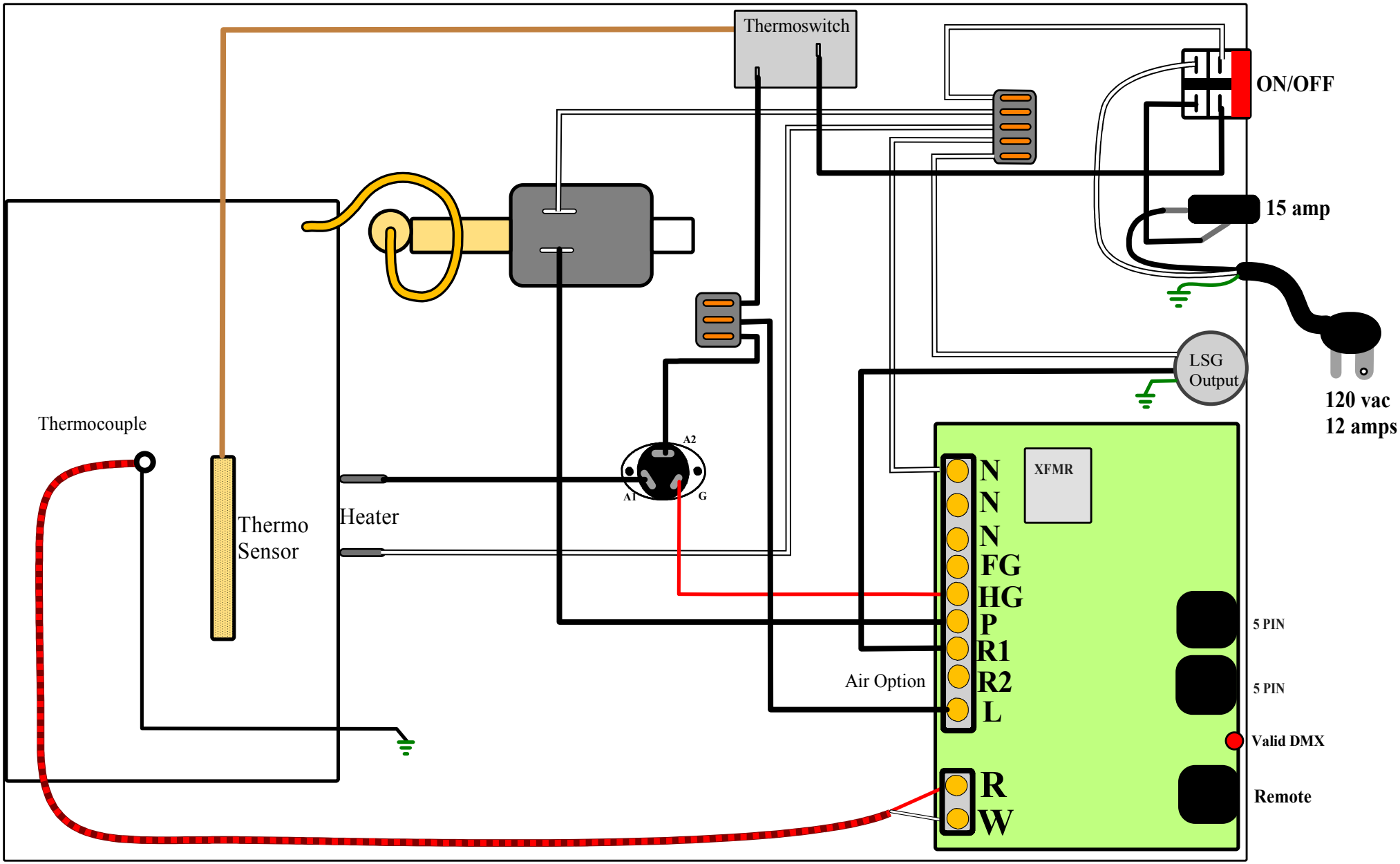

Stage/PFI/9D 120v Rev 7 Fogger **April 1 - 2013**